Código artículo 86.OR01.1331.03

Step 1

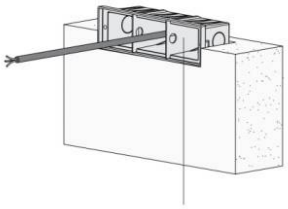

Insert support plates to prevent deformation of the recessed sleeve

Step 2

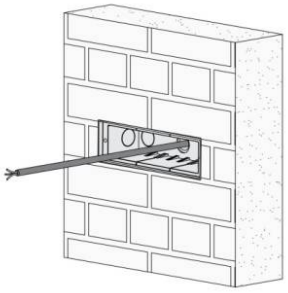

Finish the installation of concrete surface materials and remove the support plates

Step 3

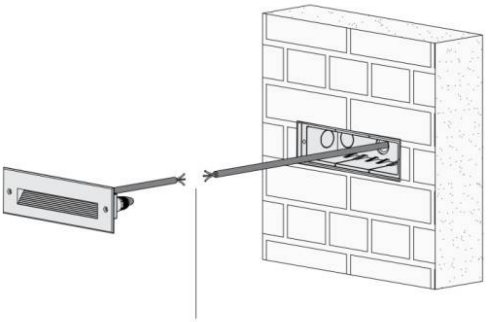

Connect the power cable

Step 4

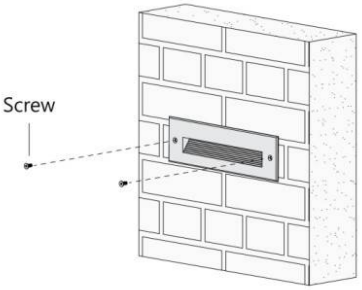

Install the light fixture on the wall

Wiring diagram

High voltage on/off fitting:refer to the following recommended wiring method

Example of wiring: